# Giorgione

## GAS OVEN

### Spare Parts Diagram

LLKGR435
LLKGR635
LLKGR635L
LLKGR935

SCAN TO SHOP

CUPPONE

# GIORGIONE - EU/UL
## Table 1

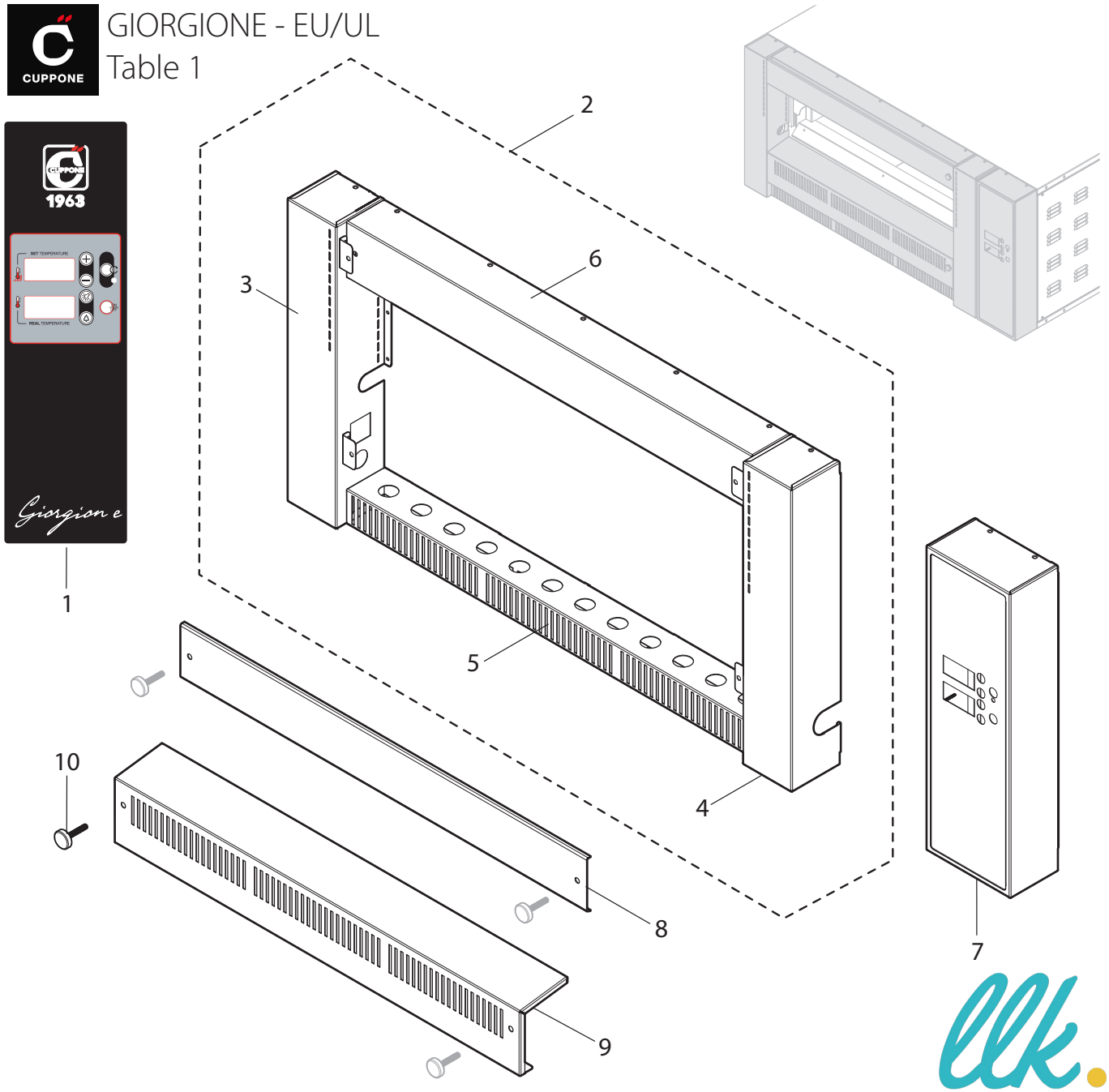


SERVICE AND REPAIRS

**TABLE 1**

| POS. | MODEL | VERSION | CODE | DESCRIPTION | SERIAL NUMBER... | DATE... | |
|---|---|---|---|---|---|---|---|
| 1 | | | C01.4000 | POLYCARBONATE FRONT | | | |
| 2 | GR 4-6 | | C01.4001 | COMPLETE FRONT | | | |
| | GR 6L-9 | | C01.4002 | COMPLETE FRONT | | | |
| 3 | | | C01.4003 | LH COLUMN ASSEMBLY | | | |
| 4 | | | C01.4004 | RH COLUMN ASSEMBLY | | | |
| 5 | GR 4-6 | | C01.4005 | BOTTOM BASE | | | |
| | GR 6L-9 | | C01.4006 | BOTTOM BASE | | | |
| 6 | GR 4-6 | | C01.4007 | TOP BASE | | | |
| | GR 6L-9 | | C01.4008 | TOP BASE | | | |
| 7 | | | C01.4009 | INSTRUMENT PANEL | | | |
| 8 | GR 4-6 | | C01.4010 | TOP BASE COVER | | | |
| | GR 6L-9 | | C01.4011 | TOP BASE COVER | | | |
| 9 | GR 4-6 | | C01.4012 | MOBILE BASE | | | |
| | GR 6L-9 | | C01.4013 | MOBILE BASE | | | |
| 10 | | | C01.4014 | GLASS FIXING SCREW | | | |
| | | | | | | | |
| | | | | | | | |
| | | | | | | | |
| | | | | | | | |
| | | | | | | | |



service@llkpizzapros.co.uk 0161 696 0052 llkpizzaovens.co.uk

# GIORGIONE - EU/UL
## Table 2

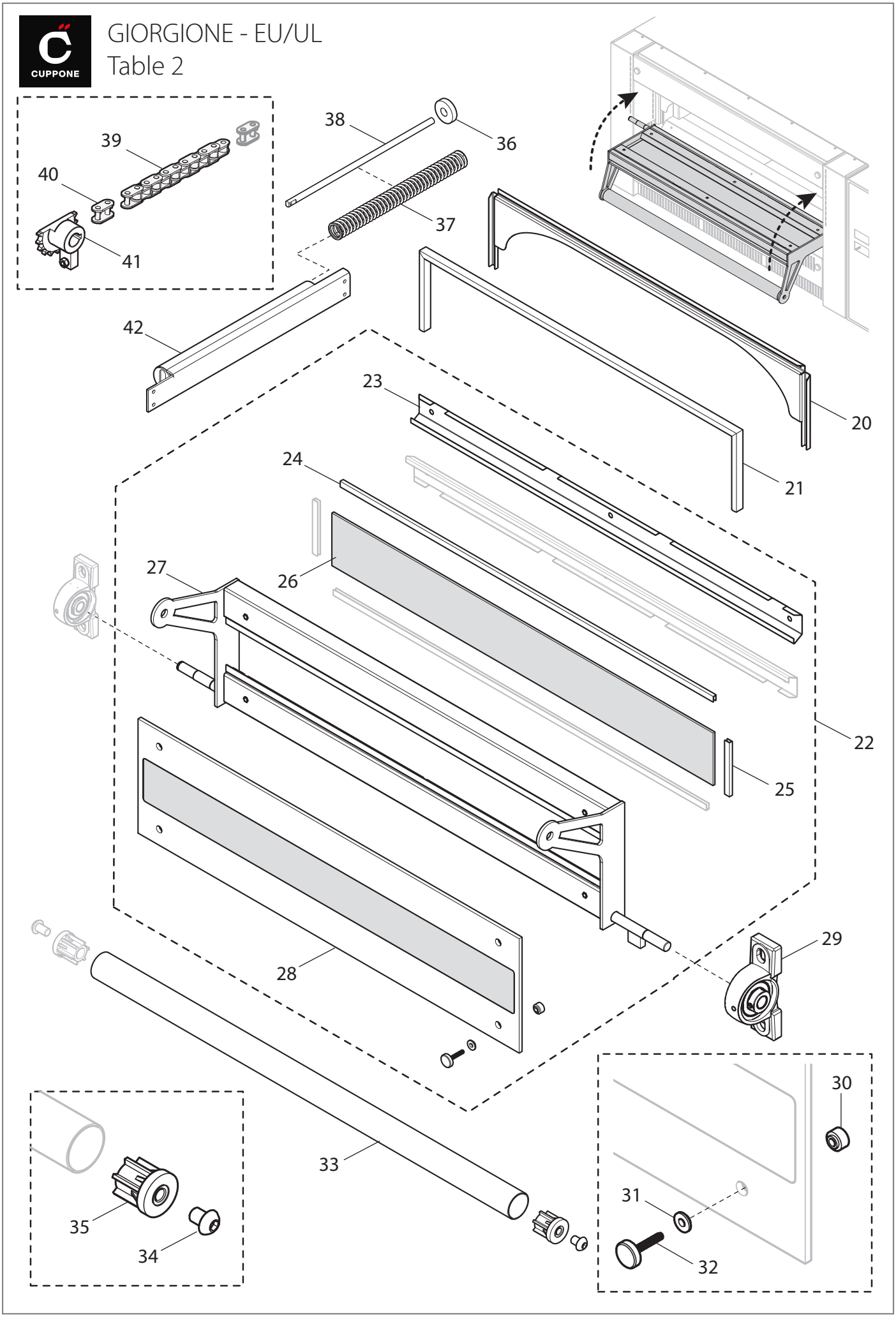




service@llkpizzapros.co.uk
0161 696 0052
llkpizzaovens.co.uk

| TABLE 2 EU/UL | | | | | | | |
|---|---|---|---|---|---|---|---|
| POS. | MODEL | VERSION | CODE | DESCRIPTION | SERIAL NUMBER... | DATE... | |
| 20 | GR 4-6 | | C01.4015 | CHAMBER ARCH | | | |
| | GR 6L-9 | | C01.4016 | CHAMBER ARCH | | | |
| 21 | GR 4-6 | | C01.4017 | DOOR SEAL 1140 | | | |
| | GR 6L-9 | | C01.4018 | DOOR SEAL 1500 | | | |
| 22 | GR 4-6 | | C01.4019 | COMPLETE DOOR | | | |
| | GR 6L-9 | | C01.4020 | COMPLETE DOOR | | | |
| 23 | GR 4-6 | | C01.4021 | DOOR GLAZING PROFILE | | | |
| | GR 6L-9 | | C01.4022 | DOOR GLAZING PROFILE | | | |
| 24 | GR 4-6 | | C01.4023 | ALUMINIUM GLASS SEAL L.761 | View on webshop | | |
| | GR 6L-9 | | C01.4024 | ALUMINIUM GLASS SEAL L.1119 | View on webshop | | |
| 25 | | | C01.3149 | ALUMINIUM GLASS SEAL L.95 | View on webshop | | |
| 26 | GR 4-6 | | C01.4025 | CERAMIC GLASS 778X93 | View on webshop | | |
| | GR 6L-9 | | C01.4026 | CERAMIC GLASS 1136X93 | View on webshop | | |
| 27 | GR 4-6 | | C01.4027 | DOOR STRUCTURE | | | |
| | GR 6L-9 | | C01.4028 | DOOR STRUCTURE | | | |
| 28 | GR 4-6 | | C01.4029 | TOUGHENED GLASS MM.6x778X202 | View on webshop | | |
| | GR 6L-9 | | C01.4030 | TOUGHENED GLASS MM.6x1136X202 | View on webshop | | |
| 29 | | | C01.3047 | SUPPORT UCP 202 | | | |
| 30 | | | C01.4031 | DOOR TOUGHENED GLASS BUSHING | View on webshop | | |
| 31 | | | C01.4032 | TOUGHENED GLASS TEFLON WASHER | View on webshop | | |
| 32 | | | C01.4033 | GLASS FIXING SCREW | View on webshop | | |
| 33 | GR 4-6 | | C01.4034 | PIPE ø38x1.5 L. 766 | | | |
| | GR 6L-9 | | C01.4035 | PIPE ø38x1.5 L. 1124 | | | |
| 34 | | | C01.3150 | TBCE SCREW A2 M12X30 | View on webshop | | |
| 35 | | | C01.3483 | PIPE FIXING TERMINAL D.38 | | | |
| 36 | | | C01.3042 | PISTON BRONZE WASHER | | | |
| 37 | GR 4-6 | | C01.1861 | DOOR SPRING | | | |
| | GR 6L-9 | | C01.3500 | DOOR SPRING | | | |
| 38 | | | C01.1860 | SINGLE PISTON ROD L. 320 | | | |
| 39 | | | C01.1859 | DOOR 3/8 CHAIN | | | |
| 40 | | | C01.3689 | CONNECTING LINK 3/8 | | | |
| 41 | | | C01.3501 | DOOR PINION ASSEMBLY | | | |
| 42 | | | C01.2482 | CYLINDER KIT | | | |



service@llkpizzapros.co.uk 0161 696 0052 llkpizzaovens.co.uk

# GIORGIONE - EU/UL
## Table 3

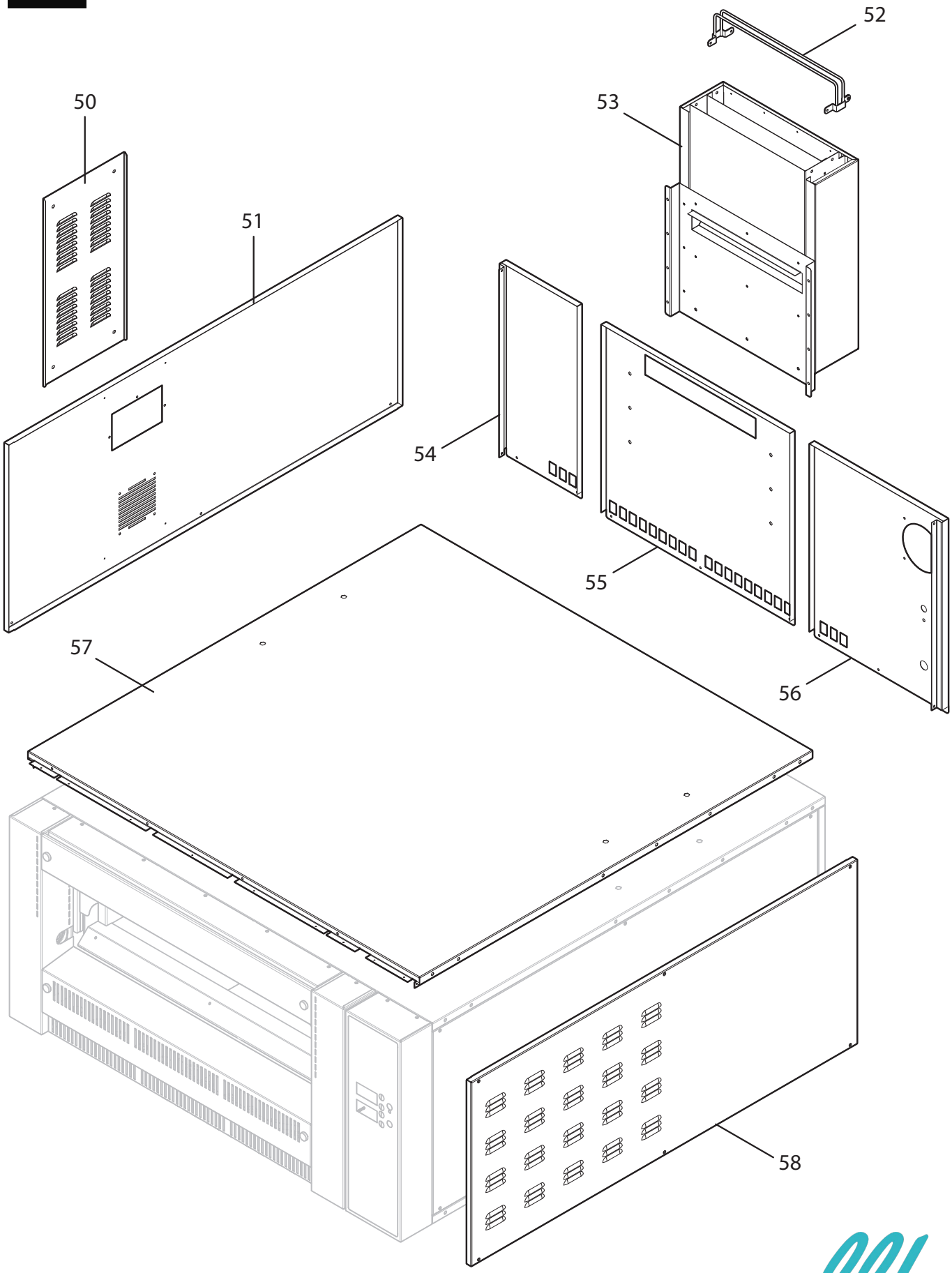


SERVICE AND REPAIRS



service@llkpizzapros.co.uk
0161 696 0052
llkpizzaovens.co.uk

| TABLE 3 EU/UL | | | | | | | |
|---|---|---|---|---|---|---|---|
| POS. | MODEL | VERSION | CODE | DESCRIPTION | SERIAL NUMBER... | DATE... | |
| 50 | | | C01.4036 | LIGHT BOX COVER | | | |
| 51 | GR 4-6L | | C01.4037 | LH PANEL | | | |
| | GR 6-9 | | C01.4038 | LH PANEL | | | |
| 52 | | | C01.4039 | FLUE FALL-ARRESTER | | | |
| 53 | | | C01.4040 | FLUE ASSEMBLY | | | |
| 54 | GR 4-6 | | C01.4041 | LH BACK PANEL | | | |
| | GR 6L-9 | | C01.4042 | LH BACK PANEL | | | |
| 55 | | | C01.4043 | CENTRAL BACK PANEL | | | |
| 56 | GR 4-6 | | C01.4044 | RH BACK PANEL | | | |
| | GR 6L-9 | | C01.4045 | RH BACK PANEL | | | |
| 57 | GR 4 | | C01.4046 | COVER | | | |
| | GR 6 | | C01.4047 | COVER | | | |
| | GR 6L | | C01.4048 | COVER | | | |
| | GR 9 | | C01.4049 | COVER | | | |
| 58 | GR 4-6L | AC 230V | C01.4050 | RH PANEL | | | |
| | GR 6-9 | AC 230V | C01.4051 | RH PANEL | | | |
| | GR 4-6L | AC 208V | C01.4052 | UL RH PANEL | | | |
| | GR 6-9 | AC 208V | C01.4053 | UL RH PANEL | | | |



service@llkpizzapros.co.uk 0161 696 0052 llkpizzaovens.co.uk

# GIORGIONE - EU/UL
## Table 4

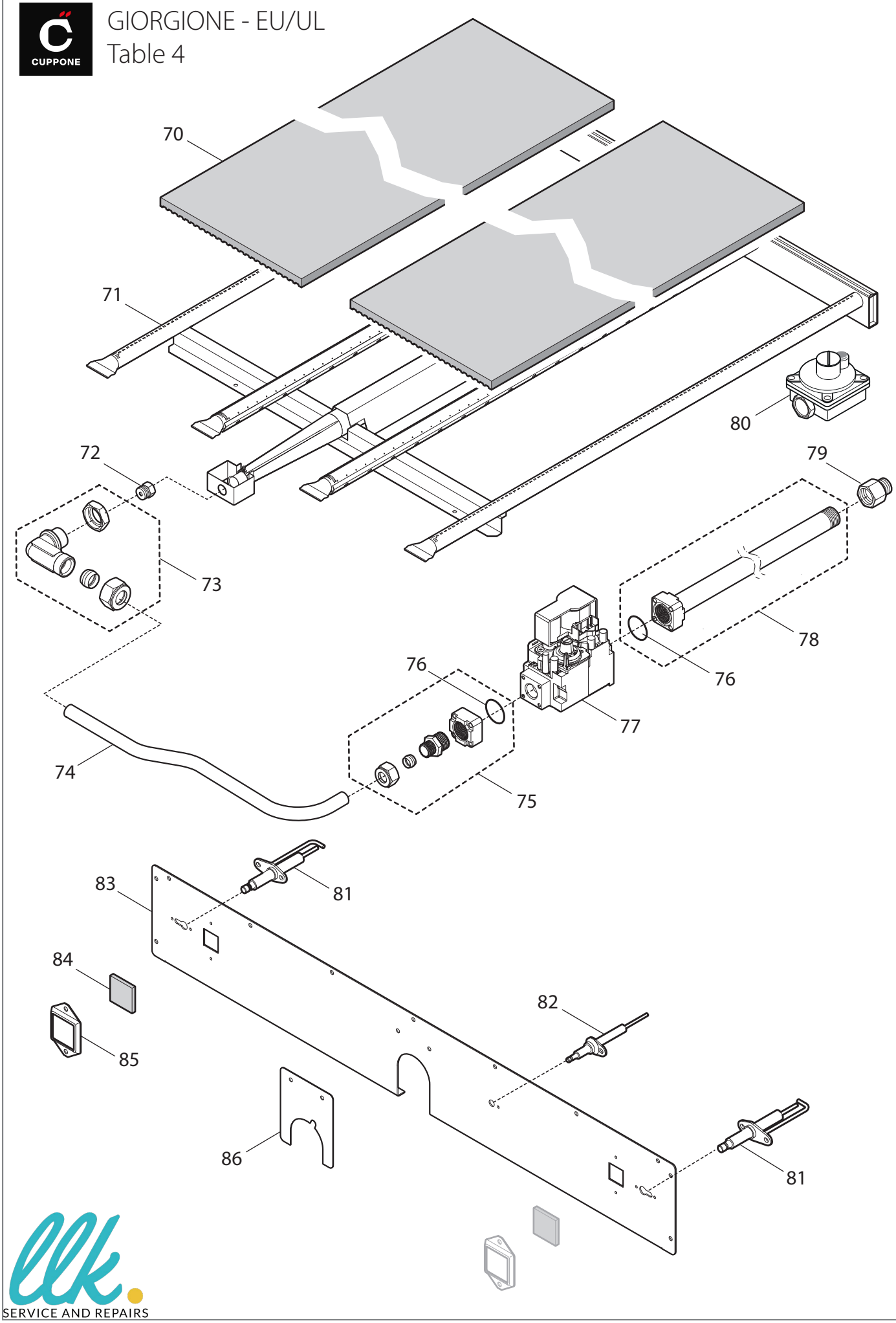

| TABLE 4 EU/UL | | | | | | | |
|---|---|---|---|---|---|---|---|
| POS. | MODEL | VERSION | CODE | DESCRIPTION | SERIAL NUMBER... | DATE... | |
| 70 | GR 4-6L | | C01.2359 | CORDIERITE BRICK 716X358X19 | View on webshop | | |
| | GR 6-9 | | C01.2441 | CORDIERITE BRICK 1074X358X19 | View on webshop | | |
| 71 | GR-4 | | C01.4054 | BURNER | | | |
| | GR-6 | | C01.4055 | BURNER | | | |
| | GR-6L | | C01.4056 | BURNER | | | |
| | GR-9 | | C01.4057 | BURNER | | | |
| 72 | | AC 230V | C01.4058 | NOZZLE d. 180 | | | |
| | | AC 230V | C01.4059 | NOZZLE d. 185 | | | |
| | | AC 230V | C01.4060 | NOZZLE d. 200 | | | |
| | | AC 230V | C01.4061 | NOZZLE d. 210 | | | |
| | | AC 208V | C01.4062 | NOZZLE d. 215 | | | |
| | | AC 230V | C01.4063 | NOZZLE d. 220 | | | |
| | | AC 230V | C01.4064 | NOZZLE d. 230 | | | |
| | | AC 208V | C01.4065 | NOZZLE d. 235 | | | |
| | | AC 230V | C01.4066 | NOZZLE d. 250 | | | |
| | | AC 230V-AC 208V | C01.4067 | NOZZLE d. 275 | | | |
| | | AC 230V | C01.4068 | NOZZLE d. 290 | | | |
| | | AC 230V | C01.4069 | NOZZLE d. 310 | | | |
| | | AC 230V | C01.4070 | NOZZLE d. 320 | | | |
| | | AC 230V | C01.4071 | NOZZLE d. 330 | | | |
| | | AC 230V | C01.4072 | NOZZLE d. 340 | | | |
| | | AC 230V | C01.4073 | NOZZLE d. 360 | | | |
| | | AC 230V | C01.4074 | NOZZLE d. 380 | | | |
| | | AC 230V-AC 208V | C01.4075 | NOZZLE d. 420 | | | |
| | | AC 208V | C01.4076 | NOZZLE d. 500 | | | |
| | | AC 208V | C01.4077 | NOZZLE d. 580 | | | |
| 73 | | | C01.4078 | 1/2 BRASS ELBOW FITTING | | | |
| 74 | GR4-6 | | C01.4079 | PIPE d.12X1.5 | | | |
| | GR6L-9 | | C01.4080 | PIPE d.12X1.5 | | | |
| 75 | | | C01.4081 | GAS PIPE CHROME FITTING 1/2 COMPLETE | | | |
| 76 | | | C01.4082 | O-RING | View on webshop | | |
| 77 | | AC 230V | C01.4083 | SOLENOID VALVE 840 230V 50HZ | View on webshop | | |
| | | AC 208V | C01.4084 | SOLENOID VALVE 840 120V 60HZ | | | |
| 78 | GR 4-6L | | C01.4085 | COMPLETE SUPPLY PIPE | | | |
| | GR 6-9 | | C01.4086 | COMPLETE SUPPLY PIPE | | | |
| 79 | | | C01.4087 | GAS PIPE CHROME FITTING 1/2 | | | |
| 80 | | AC 208V | C01.4088 | UL REGULATOR | | | |
| 81 | | | C01.4089 | IGNITION SPARK PLUG | View on webshop | | |
| 82 | | | C01.4090 | IONIZER SPARK PLUG | View on webshop | | |
| 83 | GR 4-6 | | C01.4091 | BENCH FLAME ARRESTER | | | |
| | GR 6L-9 | | C01.4092 | BENCH FLAME ARRESTER | | | |
| 84 | | | C01.4093 | BOROSILICATE GLASS 28X28 | View on webshop | | |
| 85 | | | C01.4094 | GLASS RING | View on webshop | | |
| 86 | | | C01.4095 | BENCH FLAME ARRESTER BRACKET | | | |

# GIORGIONE - EU/UL
## Table 5

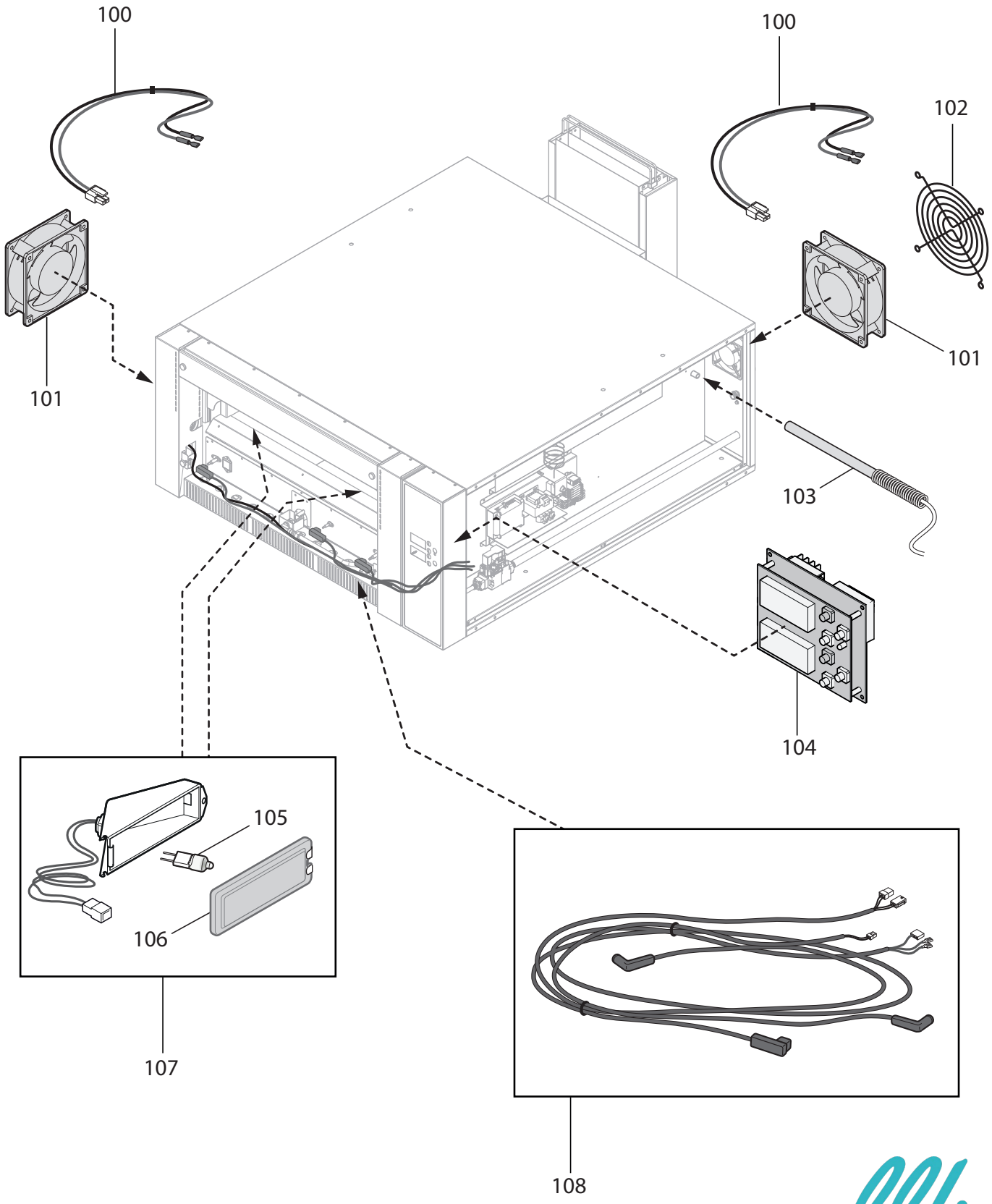




service@llkpizzapros.co.uk
0161 696 0052
llkpizzaovens.co.uk

| TABLE 5 - EU/UL | | | | | | | |
|---|---|---|---|---|---|---|---|
| POS. | MODEL | VERSION | CODE | DESCRIPTION | SERIAL NUMBER... | DATE... | |
| 100 | | AC 230V | C01.4096 | FAN ACCESSORY | View on webshop | | |
| | | AC 208V | C01.4097 | UL FAN ACCESSORY | | | |
| 101 | | | C01.3153 | COOLING FAN | View on webshop | | |
| 102 | | | C01.4098 | FAN PROTECTION GRID | | | |
| 103 | | | C01.2540 | TCJ PROBE FOR L.1500 OVENS | View on webshop | | |
| 104 | | AC 230V | C01.2231 | CONTROL PANEL | View on webshop | | |
| | | AC 208V | C01.4099 | UL CONTROL BOARD | | | |
| 105 | | | C01.2332 | LAMP G4 12V 20W 300 C | View on webshop | | |
| 106 | | | C01.4100 | BULB HOLDER GLASS 30X70 | View on webshop | | |
| 107 | | | C01.4101 | LAMP HOLDER BJB 30X70 12V COMPLETE | View on webshop | | |
| 108 | GR 4-6 | AC 230V | C01.4102 | WIRING ACCESSORY | View on webshop | | |
| | GR 6L-9 | AC 230V | C01.4103 | WIRING ACCESSORY | View on webshop | | |
| | GR 4-6 | AC 208V | C01.4104 | UL WIRING ACCESSORY | | | |
| | GR 6L-9 | AC 208V | C01.4105 | UL WIRING ACCESSORY | | | |



service@llkpizzapros.co.uk

0161 696 0052

llkpizzaovens.co.uk

# GIORGIONE - EU
## Table 6

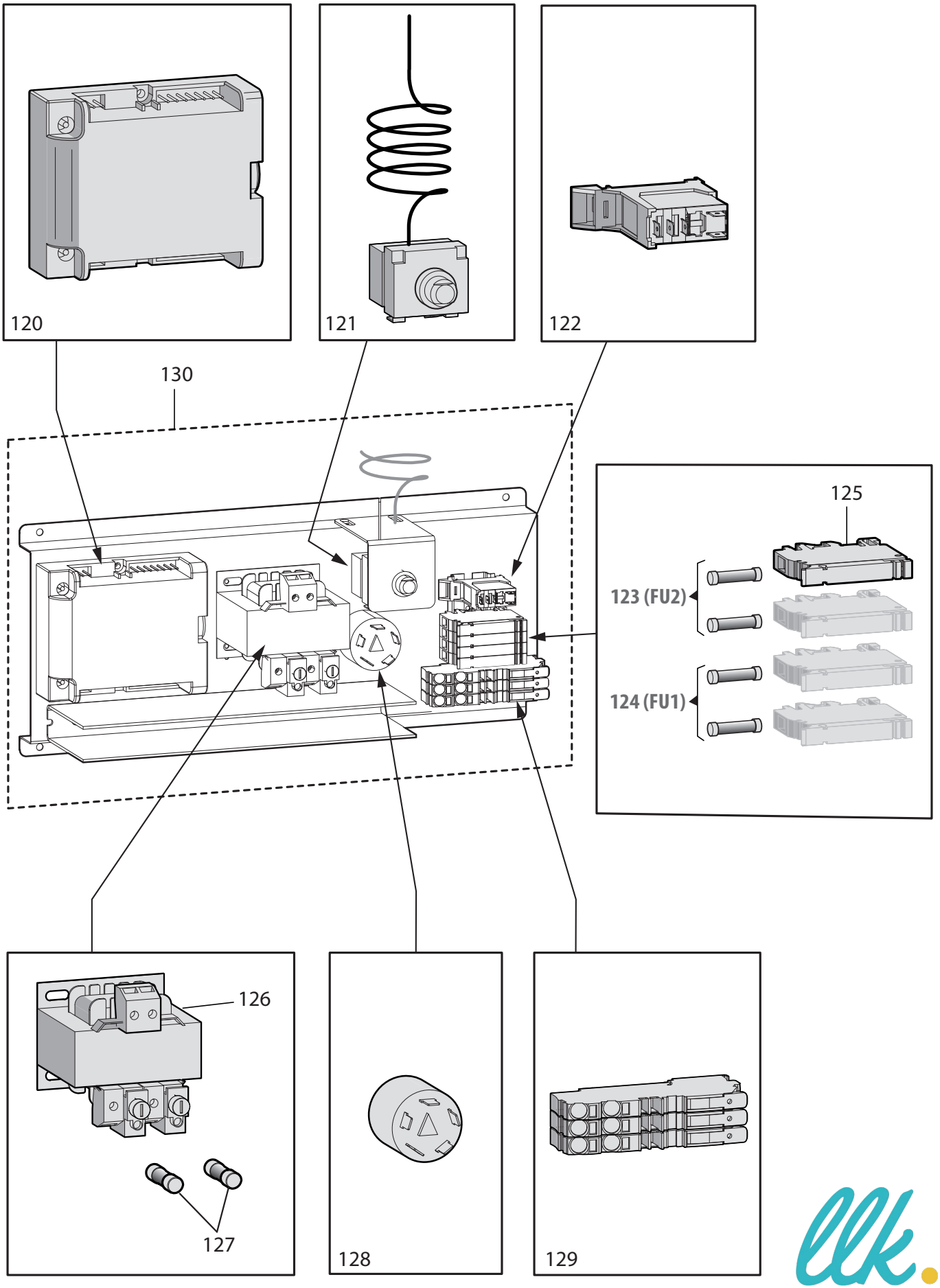




service@llkpizzapros.co.uk
0161 696 0052
llkpizzaovens.co.uk

| TABLE 6 - EU | | | | | | | |
|---|---|---|---|---|---|---|---|
| POS. | MODEL | VERSION | CODE | DESCRIPTION | SERIAL NUMBER... | DATE... | |
| 120 | | AC 230V | C01.4106 | CE FLAME CONTROL | View on webshop | | |
| 121 | | AC 230V | C01.1881 | SAFETY CONTROL PANEL FAIL SAFE 500 C | View on webshop | | |
| 122 | | AC 230V | C01.3166 | RELAY 230Vac | View on webshop | | |
| 123 | | AC 230V | C01.2483 | FUSE 5X20T 4A | | | |
| 124 | | AC 230V | C01.3159 | FUSE 5X20T 6.3A | | | |
| 125 | | AC 230V | C01.2406 | FUSE HOLDER TERMINAL KIT 5X20 | | | |
| 126 | | AC 230V | C01.1875 | TRANSFORMER 230-12 50VA | View on webshop | | |
| 127 | | AC 230V | C01.3158 | FUSE 5X20T 2.5A | | | |
| 128 | | AC 230V | C01.4107 | CAPACITIVE FILTER | View on webshop | | |
| 129 | | AC 230V | C01.3157 | SPARE KIT TERMINAL BOARD | | | |
| 130 | | AC 230V | C01.4108 | COMPLETE WIRING | | | |



service@llkpizzapros.co.uk

0161 696 0052

llkpizzaovens.co.uk

# GIORGIONE - UL
## Table 7

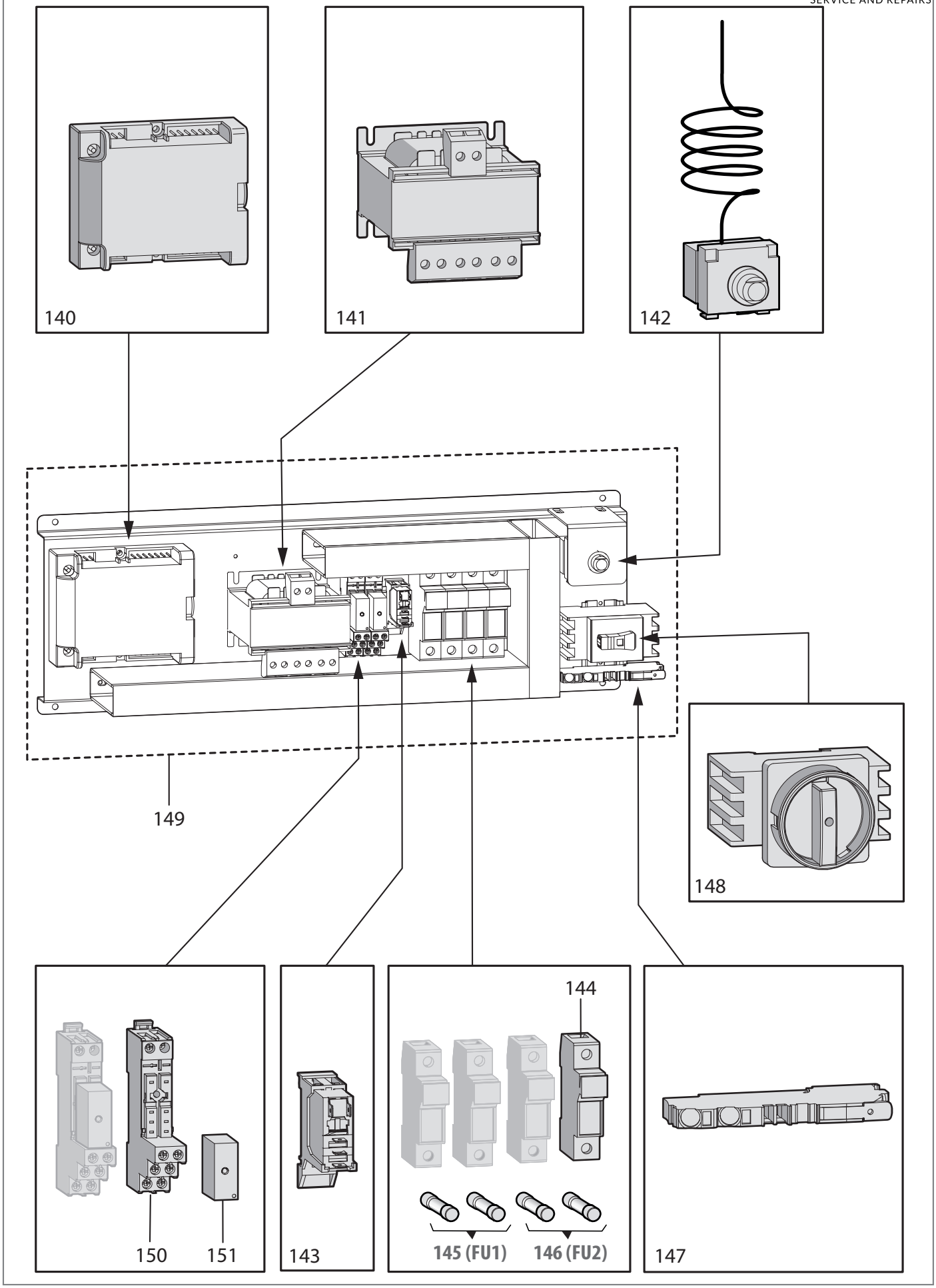




service@llkpizzapros.co.uk
0161 696 0052
llkpizzaovens.co.uk

| TABLE 7 - UL | | | | | | | |
|---|---|---|---|---|---|---|---|
| POS. | MODEL | VERSION | CODE | DESCRIPTION | SERIAL NUMBER... | DATE... | |
| 140 | | AC 208V | C01.4109 | UL FLAME CONTROL | | | |
| 141 | | AC 208V | C01.4110 | TRANSFORMER 208-12 50VA UL | | | |
| 142 | | AC 208V | C01.1881 | SAFETY CONTROL PANEL FAIL SAFE 500 C | View on webshop | | |
| 143 | | AC 208V | C01.4111 | RELAY 120Vac | | | |
| 144 | | AC 208V | C01.3511 | FUSE HOLDER 10X38 UL | | | |
| 145 | | AC 208V | C01.4112 | FUSE 10X38 6A UL | | | |
| 146 | | AC 208V | C01.4113 | FUSE 10X38F 4A UL | | | |
| 147 | | AC 208V | C01.4114 | EARTH LEVER TERMINAL KIT | | | |
| 148 | | AC 208V | C01.4115 | THREE-POLE DISCONNECTOR 40A | | | |
| 149 | | AC 208V | C01.4116 | UL COMPLETE WIRING | | | |
| 150 | | AC 208V | C01.4117 | SOCKET FOR 230Vac RELAY | | | |
| 151 | | AC 208V | C01.4118 | RELAY 230Vac | | | |